- **Wide Supply Range:**
  - **Single Supply . . . 3 V to 32 V (26 V for LM2904)**
  - **or Dual Supplies . . . ±1.5 V to ±16 V (±13 V for LM2904)**
- **Low Supply-Current Drain, Independent of Supply Voltage . . . 0.7 mA Typ**
- **Common-Mode Input Voltage Range Includes Ground, Allowing Direct Sensing Near Ground**
- **Low Input Bias and Offset Parameters:**
  - **Input Offset Voltage . . . 3 mV Typ**
    A Versions . . . 2 mV Typ
  - **Input Offset Current . . . 2 nA Typ**
  - **Input Bias Current . . . 20 nA Typ**
    A Versions . . . 15 nA Typ
- **Differential Input Voltage Range Equal to Maximum-Rated Supply Voltage . . . 32 V (26 V for LM2904)**
- **Open-Loop Differential Voltage Amplification . . . 100 V/mV Typ**
- **Internal Frequency Compensation**

LM158, LM158A . . . JG PACKAGE
LM258, LM258A . . . D, DGK, OR P PACKAGE
LM358 . . . D, DGK, P, PS, OR PW PACKAGE
LM358A . . . D, DGK, P, OR PW PACKAGE
LM2904 . . . D, DGK, P, PS, OR PW PACKAGE
(TOP VIEW)

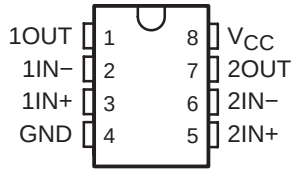

LM158, LM158A . . . FK PACKAGE
(TOP VIEW)

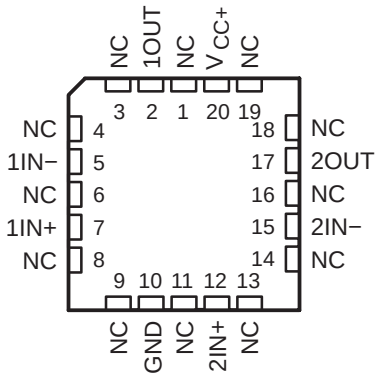

NC − No internal connection

description/ordering information

These devices consist of two independent, high-gain, frequency-compensated operational amplifiers designed to operate from a single supply over a wide range of voltages. Operation from split supplies also is possible if the difference between the two supplies is 3 V to 32 V (3 V to 26 V for the LM2904), and V_{CC} is at least 1.5 V more positive than the input common-mode voltage. The low supply-current drain is independent of the magnitude of the supply voltage.

Applications include transducer amplifiers, dc amplification blocks, and all the conventional operational amplifier circuits that now can be implemented more easily in single-supply-voltage systems. For example, these devices can be operated directly from the standard 5-V supply used in digital systems and easily can provide the required interface electronics without additional ±5-V supplies.

Please be aware that an important notice concerning availability, standard warranty, and use in critical applications of Texas Instruments semiconductor products and disclaimers thereto appears at the end of this data sheet.

PRODUCTION DATA information is current as of publication date. Products conform to specifications per the terms of Texas Instruments standard warranty. Production processing does not necessarily include testing of all parameters.

Copyright © 2004, Texas Instruments Incorporated
On products compliant to MIL-PRF-38535, all parameters are tested unless otherwise noted. On all other products, production processing does not necessarily include testing of all parameters.

description/ordering information (continued)

ORDERING INFORMATION

T_A	V_{IO}max AT 25°C	MAX TESTED V_{CC}	PACKAGE†		ORDERABLE PART NUMBER	TOP-SIDE MARKING
0°C to 70°C	7 mV	30 V	PDIP (P)	Tube of 50	LM358P	LM358P
			SOIC (D)	Tube of 75	LM358D	LM358
				Reel of 2500	LM358DR	
			SOP (PS)	Reel of 2000	LM358PSR	L358
			TSSOP (PW)	Tube of 150	LM358PW	L358
				Reel of 2000	LM358PWR	
			MSOP/VSSOP (DGK)	Reel of 2500	LM358DGKR	M5_‡
	3 mV	30 V	PDIP (P)	Tube of 50	LM358AP	LM358AP
			SOIC (D)	Tube of 75	LM358AD	LM358A
				Reel of 2500	LM358ADR	
			TSSOP (PW)	Tube of 150	LM358APW	L358A
				Reel of 2000	LM358APWR	
			MSOP/VSSOP (DGK)	Reel of 2500	LM358ADGKR	M6_‡
−25°C to 85°C	5 mV	30 V	PDIP (P)	Tube of 50	LM258P	LM258P
			SOIC (D)	Tube of 75	LM258D	LM258
				Reel of 2500	LM258DR	
			MSOP/VSSOP (DGK)	Reel of 2500	LM258DGKR	M2_‡
	3 mV	30 V	PDIP (P)	Tube of 50	LM258AP	LM258AP
			SOIC (D)	Tube of 75	LM258AD	LM258A
				Reel of 2500	LM258ADR	
			MSOP/VSSOP (DGK)	Reel of 2500	LM258ADGKR	M3_‡
−40°C to 125°C	7 mV	26 V	PDIP (P)	Tube of 50	LM2904P	LM2904P
			SOIC (D)	Tube of 75	LM2904D	LM2904
				Reel of 2500	LM2904DR	
			SOP (PS)	Reel of 2000	LM2904PSR	L2904
			TSSOP (PW)	Tube of 150	LM2904PW	L2904
				Reel of 2000	LM2904PWR	
			MSOP/VSSOP (DGK)	Reel of 2500	LM2904DGKR	MB_‡
	7 mV	32 V	SOIC (D)	Reel of 2500	LM2904VQDR	L2904V
			TSSOP (PW)	Reel of 2000	LM2904VQPWR	L2904V
	2 mV	32 V	SOIC (D)	Reel of 2500	LM2904AVQDR	L2904AV
			TSSOP (PW)	Reel of 2000	LM2904AVQPWR	L2904AV
−55°C to 125°C	5 mV	30 V	CDIP (JG)	Tube of 50	LM158JG	LM158JG
			LCCC (FK)	Tube of 55	LM158FK	LM158FK
	2 mV	30 V	CDIP (JG)	Tube of 50	LM158AJG	LM158AJG
			LCCC (FK)	Tube of 55	LM158AFK	LM158AFK

† Package drawings, standard packing quantities, thermal data, symbolization, and PCB design guidelines are available at www.ti.com/sc/package.
‡ The actual top-side marking has one additional character that designates the assembly/test site.

symbol (each amplifier)

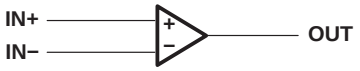

schematic (each amplifier)

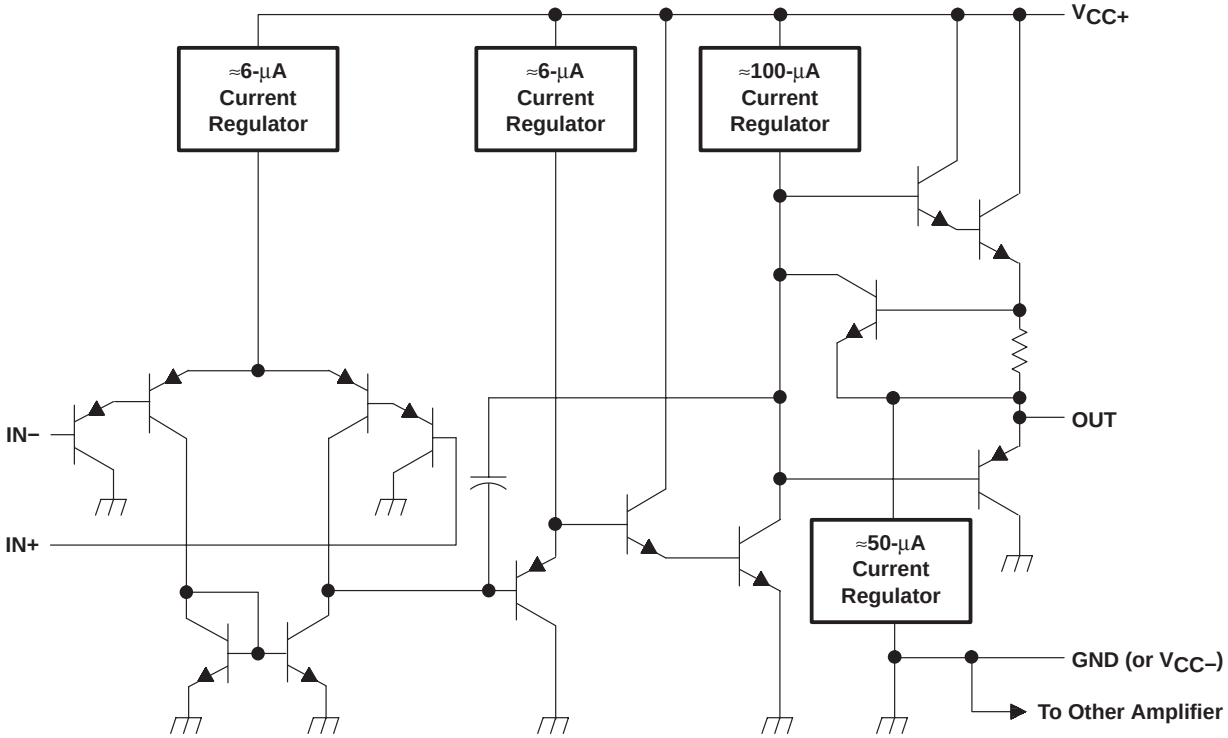

COMPONENT COUNT	
Epi-FET	1
Diodes	2
Resistors	7
Transistors	51
Capacitors	2

absolute maximum ratings over operating free-air temperature range (unless otherwise noted)†

		LM158, LM158A LM258, LM258A LM358, LM358A LM2904V	LM2904	UNIT
Supply voltage, V_{CC} (see Note 1)		±16 or 32	±13 or 26	V
Differential input voltage, V_{ID} (see Note 2)		±32	±26	V
Input voltage, V_I (either input)		−0.3 to 32	−0.3 to 26	V
Duration of output short circuit (one amplifier) to ground at (or below) 25°C free-air temperature ($V_{CC} \leq 15$ V) (see Note 3)		Unlimited	Unlimited	
Package thermal impedance, θ_{JA} (see Notes 4 and 5)	D package	97	97	°C/W
	DGK package	172	172	
	P package	85	85	
	PS package	95	95	
	PW package	149	149	
Package thermal impedance, θ_{JC} (see Notes 6 and 7)	FK package	5.61		°C/W
	JG package	14.5		
Operating free-air temperature range, T_A	LM158, LM158A	−55 to 125		°C
	LM258, LM258A	−25 to 85		
	LM358, LM358A	0 to 70		
	LM2904	−40 to 125	−40 to 125	
Operating virtual junction temperature, T_J		150	150	°C
Case temperature for 60 seconds	FK package	260		°C
Lead temperature 1,6 mm (1/16 inch) from case for 60 seconds	JG package	300	300	°C
Storage temperature range, T_{stg}		−65 to 150	−65 to 150	°C

† Stresses beyond those listed under “absolute maximum ratings” may cause permanent damage to the device. These are stress ratings only, and functional operation of the device at these or any other conditions beyond those indicated under “recommended operating conditions” is not implied. Exposure to absolute-maximum-rated conditions for extended periods may affect device reliability.

NOTES:
1. All voltage values, except differential voltages and V_{CC} specified for measurement of I_{OS}, are with respect to the network ground terminal.
2. Differential voltages are at IN+ with respect to IN−.
3. Short circuits from outputs to V_{CC} can cause excessive heating and eventual destruction.
4. Maximum power dissipation is a function of $T_J(max)$, θ_{JA}, and T_A. The maximum allowable power dissipation at any allowable ambient temperature is $P_D = (T_J(max) - T_A)/\theta_{JA}$. Operating at the absolute maximum T_J of 150°C can affect reliability.
5. The package thermal impedance is calculated in accordance with JESD 51-7.
6. Maximum power dissipation is a function of $T_J(max)$, θ_{JC}, and T_C. The maximum allowable power dissipation at any allowable case temperature is $P_D = (T_J(max) - T_C)/\theta_{JC}$. Operating at the absolute maximum T_J of 150°C can affect reliability.
7. The package thermal impedance is calculated in accordance with MIL-STD-883.

electrical characteristics at specified free-air temperature, V_{CC} = 5 V (unless otherwise noted)

PARAMETER		TEST CONDITIONS†		T_A‡	LM158 LM258 MIN	LM158 LM258 TYP§	LM158 LM258 MAX	LM358 MIN	LM358 TYP§	LM358 MAX	UNIT
V_{IO}	Input offset voltage	V_{CC} = 5 V to MAX, $V_{IC} = V_{ICR(min)}$, V_O = 1.4 V		25°C		3	5		3	7	mV
				Full range			7			9	
$\alpha_{V_{IO}}$	Average temperature coefficient of input offset voltage			Full range		7			7		µV/°C
I_{IO}	Input offset current	V_O = 1.4 V		25°C		2	30		2	50	nA
				Full range			100			150	
$\alpha_{I_{IO}}$	Average temperature coefficient of input offset current			Full range		10			10		pA/°C
I_{IB}	Input bias current	V_O = 1.4 V		25°C		−20	−150		−20	−250	nA
				Full range			−300			−500	
V_{ICR}	Common-mode input voltage range	V_{CC} = 5 V to MAX		25°C	0 to V_{CC} − 1.5			0 to V_{CC} − 1.5			V
				Full range	0 to V_{CC} − 2			0 to V_{CC} − 2			
V_{OH}	High-level output voltage	$R_L \geq 2$ kΩ		25°C	V_{CC} − 1.5			V_{CC} − 1.5			V
		$R_L \geq 10$ kΩ		25°C							
		V_{CC} = MAX	$R_L = 2$ kΩ	Full range	26			26			
			$R_L \geq 10$ kΩ	Full range	27	28		27	28		
V_{OL}	Low-level output voltage	$R_L \leq 10$ kΩ		Full range		5	20		5	20	mV
A_{VD}	Large-signal differential voltage amplification	V_{CC} = 15 V, V_O = 1 V to 11 V, $R_L \geq 2$ kΩ		25°C	50	100		25	100		V/mV
				Full range	25			15			
CMRR	Common-mode rejection ratio	V_{CC} = 5 V to MAX, $V_{IC} = V_{ICR(min)}$		25°C	70	80		65	80		dB
k_{SVR}	Supply-voltage rejection ratio ($\Delta V_{DD}/\Delta V_{IO}$)	V_{CC} = 5 V to MAX		25°C	65	100		65	100		dB
V_{O1}/V_{O2}	Crosstalk attenuation	f = 1 kHz to 20 kHz		25°C		120			120		dB
I_O	Output current	V_{CC} = 15 V, V_{ID} = 1 V, V_O = 0	Source	25°C	−20	−30		−20	−30		mA
				Full range	−10			−10			
		V_{CC} = 15 V, V_{ID} = −1 V, V_O = 15 V	Sink	25°C	10	20		10	20		
				Full range	5			5			
I_O	Output current	V_{ID} = −1 V, V_O = 200 mV		25°C	12	30		12	30		µA
I_{OS}	Short-circuit output current	V_{CC} at 5 V, GND at −5 V, V_O = 0		25°C		±40	±60		±40	±60	mA
I_{CC}	Supply current (two amplifiers)	V_O = 2.5 V, No load		Full range		0.7	1.2		0.7	1.2	mA
		V_{CC} = MAX, V_O = 0.5 V, No load		Full range		1	2		1	2	

† All characteristics are measured under open-loop conditions, with zero common-mode input voltage, unless otherwise specified. MAX V_{CC} for testing purposes is 26 V for the LM2904 and 30 V for others.
‡ Full range is −55°C to 125°C for LM158, −25°C to 85°C for LM258, 0°C to 70°C for LM358, and −40°C to 125°C for LM2904.
§ All typical values are at T_A = 25°C.

electrical characteristics at specified free-air temperature, V_{CC} = 5 V (unless otherwise noted)

PARAMETER		TEST CONDITIONS†		T_A‡	LM2904 MIN	LM2904 TYP§	LM2904 MAX	UNIT
V_{IO}	Input offset voltage	V_{CC} = 5 V to MAX, $V_{IC} = V_{ICR(min)}$, V_O = 1.4 V	Non-A devices	25°C		3	7	mV
				Full range			10	
			A-suffix devices	25°C		1	2	
				Full range			4	
$\alpha_{V_{IO}}$	Average temperature coefficient of input offset voltage			Full range		7		µV/°C
I_{IO}	Input offset current	V_O = 1.4 V	Non-V device	25°C		2	50	nA
				Full range			300	
			V-suffix device	25°C		2	50	
				Full range			150	
$\alpha_{I_{IO}}$	Average temperature coefficient of input offset current			Full range		10		pA/°C
I_{IB}	Input bias current	V_O = 1.4 V		25°C		−20	−250	nA
				Full range			−500	
V_{ICR}	Common-mode input voltage range	V_{CC} = 5 V to MAX		25°C	0 to V_{CC} − 1.5			V
				Full range	0 to V_{CC} − 2			
V_{OH}	High-level output voltage	$R_L \geq 10$ kΩ		25°C	V_{CC} − 1.5			V
		V_{CC} = MAX, Non-V device	R_L = 2 kΩ	Full range	22			
			$R_L \geq 10$ kΩ	Full range	23	24		
		V_{CC} = MAX, V-suffix device	R_L = 2 kΩ	Full range	26			
			$R_L \geq 10$ kΩ	Full range	27	28		
V_{OL}	Low-level output voltage	$R_L \leq 10$ kΩ		Full range		5	20	mV
A_{VD}	Large-signal differential voltage amplification	V_{CC} = 15 V, V_O = 1 V to 11 V, $R_L \geq 2$ kΩ		25°C	25	100		V/mV
				Full range	15			
CMRR	Common-mode rejection ratio	V_{CC} = 5 V to MAX, $V_{IC} = V_{ICR(min)}$	Non-V device	25°C	50	80		dB
			V-suffix device	25°C	65	80		
k_{SVR}	Supply-voltage rejection ratio ($\Delta V_{DD}/\Delta V_{IO}$)	V_{CC} = 5 V to MAX		25°C	65	100		dB
V_{O1}/V_{O2}	Crosstalk attenuation	f = 1 kHz to 20 kHz		25°C		120		dB
I_O	Output current	V_{CC} = 15 V, V_{ID} = 1 V, V_O = 0	Source	25°C	−20	−30		mA
				Full range	−10			mA
		V_{CC} = 15 V, V_{ID} = −1 V, V_O = 15 V	Sink	25°C	10	20		mA
				Full range	5			mA
		V_{ID} = −1 V, V_O = 200 mV	Non-V device	25°C		30		µA
			V-suffix device	25°C	12	40		
I_{OS}	Short-circuit output current	V_{CC} at 5 V, GND at −5 V, V_O = 0		25°C		±40	±60	mA
I_{CC}	Supply current (two amplifiers)	V_O = 2.5 V, No load		Full range		0.7	1.2	mA
		V_{CC} = MAX, V_O = 0.5 V, No load		Full range		1	2	

† All characteristics are measured under open-loop conditions, with zero common-mode input voltage, unless otherwise specified. MAX V_{CC} for testing purposes is 26 V for the LM2904, 32 V for the LM2904V, and 30 V for others.
‡ Full range is −55°C to 125°C for LM158, −25°C to 85°C for LM258, 0°C to 70°C for LM358, and −40°C to 125°C for LM2904.
§ All typical values are at T_A = 25°C.

electrical characteristics at specified free-air temperature, V_{CC} = 5 V (unless otherwise noted)

PARAMETER		TEST CONDITIONS†		T_A‡	LM158A MIN	LM158A TYP§	LM158A MAX	LM258A MIN	LM258A TYP§	LM258A MAX	UNIT
V_{IO}	Input offset voltage	V_{CC} = 5 V to 30 V, $V_{IC} = V_{ICR(min)}$, V_O = 1.4 V		25°C			2		2	3	mV
				Full range			4			4	
$\alpha_{V_{IO}}$	Average temperature coefficient of input offset voltage			Full range		7	15*		7	15	µV/°C
I_{IO}	Input offset current	V_O = 1.4 V		25°C		2	10		2	15	nA
				Full range			30			30	
$\alpha_{I_{IO}}$	Average temperature coefficient of input offset current			Full range		10	200		10	200	pA/°C
I_{IB}	Input bias current	V_O = 1.4 V		25°C		−15	−50		−15	−80	nA
				Full range			−100			−100	
V_{ICR}	Common-mode input voltage range	V_{CC} = 30 V		25°C	0 to V_{CC} − 1.5			0 to V_{CC} − 1.5			V
				Full range	0 to V_{CC} − 2			0 to V_{CC} − 2			
V_{OH}	High-level output voltage	$R_L \geq 2$ kΩ		25°C	V_{CC} − 1.5			V_{CC} − 1.5			V
		V_{CC} = 30 V	R_L = 2 kΩ	Full range	26			26			
			$R_L \geq 10$ kΩ	Full range	27	28		27	28		
V_{OL}	Low-level output voltage	$R_L \leq 10$ kΩ		Full range		5	20		5	20	mV
A_{VD}	Large-signal differential voltage amplification	V_{CC} = 15 V, V_O = 1 V to 11 V, $R_L \geq 2$ kΩ		25°C	50	100		50	100		V/mV
				Full range	25			25			
CMRR	Common-mode rejection ratio			25°C	70	80		70	80		dB
k_{SVR}	Supply-voltage rejection ratio ($\Delta V_{DD}/\Delta V_{IO}$)			25°C	65	100		65	100		dB
V_{O1}/V_{O2}	Crosstalk attenuation	f = 1 kHz to 20 kHz		25°C		120			120		dB
I_O	Output current	V_{CC} = 15 V, V_{ID} = 1 V, V_O = 0	Source	25°C	−20	−30	−60	−20	−30	−60	mA
				Full range	−10			−10			
		V_{CC} = 15 V, V_{ID} = −1 V, V_O = 15	Sink	25°C	10	20		10	20		
				Full range	5			5			
		V_{ID} = −1 V, V_O = 200 mV		25°C	12	30		12	30		µA
I_{OS}	Short-circuit output current	V_{CC} at 5 V, GND at −5 V, V_O = 0		25°C		±40	±60		±40	±60	mA
I_{CC}	Supply current (two amplifiers)	V_O = 2.5 V, No load		Full range		0.7	1.2		0.7	1.2	mA
		V_{CC} = MAX, V_O = 0.5 V, No load		Full range		1	2		1	2	

*On products compliant to MIL-PRF-38535, this parameter is not production tested.

† All characteristics are measured under open-loop conditions, with zero common-mode input voltage, unless otherwise specified. MAX V_{CC} for testing purposes is 26 V for LM2904 and 30 V for others.

‡ Full range is −55°C to 125°C for LM158A, −25°C to 85°C for LM258A, and 0°C to 70°C for LM358A.

§ All typical values are at T_A = 25°C.

electrical characteristics at specified free-air temperature, V_{CC} = 5 V (unless otherwise noted)

PARAMETER		TEST CONDITIONS†		T_A‡	LM358A MIN	LM358A TYP§	LM358A MAX	UNIT
V_{IO}	Input offset voltage	V_{CC} = 5 V to 30 V, $V_{IC} = V_{ICR(min)}$, V_O = 1.4 V		25°C		2	3	mV
				Full range			5	
$\alpha_{V_{IO}}$	Average temperature coefficient of input offset voltage			Full range		7	20	µV/°C
I_{IO}	Input offset current	V_O = 1.4 V		25°C		2	30	nA
				Full range			75	
$\alpha_{I_{IO}}$	Average temperature coefficient of input offset current			Full range		10	300	pA/°C
I_{IB}	Input bias current	V_O = 1.4 V		25°C		−15	−100	nA
				Full range			−200	
V_{ICR}	Common-mode input voltage range	V_{CC} = 30 V		25°C	0 to V_{CC} − 1.5			V
				Full range	0 to V_{CC} −2			
V_{OH}	High-level output voltage	$R_L \geq 2$ kΩ		25°C	V_{CC} − 1.5			V
		V_{CC} = 30 V	R_L = 2 kΩ	Full range	26			
			$R_L \geq 10$ kΩ	Full range	27	28		
V_{OL}	Low-level output voltage	$R_L \leq 10$ kΩ		Full range		5	20	mV
A_{VD}	Large-signal differential voltage amplification	V_{CC} = 15 V, V_O = 1 V to 11 V, $R_L \geq 2$ kΩ		25°C	25	100		V/mV
				Full range	15			
CMRR	Common-mode rejection ratio			25°C	65	80		dB
k_{SVR}	Supply-voltage rejection ratio ($\Delta V_{DD}/\Delta V_{IO}$)			25°C	65	100		dB
V_{O1}/V_{O2}	Crosstalk attenuation	f = 1 kHz to 20 kHz		25°C		120		dB
I_O	Output current	V_{CC} = 15 V, V_{ID} = 1 V, V_O = 0	Source	25°C	−20	−30	−60	mA
				Full range	−10			
		V_{CC} = 15 V, V_{ID} = −1 V, V_O = 15 V	Sink	25°C	10	20		
				Full range	5			
		V_{ID} = −1 V, V_O = 200 mV		25°C		30		µA
I_{OS}	Short-circuit output current	V_{CC} at 5 V, GND at −5 V, V_O = 0		25°C		±40	±60	mA
I_{CC}	Supply current (two amplifiers)	V_O = 2.5 V, No load		Full range		0.7	1.2	mA
		V_{CC} = MAX, V_O = 0.5 V, No load		Full range		1	2	

† All characteristics are measured under open-loop conditions, with zero common-mode input voltage, unless otherwise specified. MAX V_{CC} for testing purposes is 26 V for LM2904 and 30 V for others.
‡ Full range is −55°C to 125°C for LM158A, −25°C to 85°C for LM258A, and 0°C to 70°C for LM358A.
§ All typical values are at T_A = 25°C.

operating conditions, V_{CC} = ±15 V, T_A = 25°C

PARAMETER		TEST CONDITIONS	TYP	UNIT
SR	Slew rate at unity gain	R_L = 1 MΩ, C_L = 30 pF, V_I = ±10 V (see Figure 1)	0.3	V/µs
B_1	Unity-gain bandwidth	R_L = 1 MΩ, C_L = 20 pF (see Figure 1)	0.7	MHz
V_n	Equivalent input noise voltage	R_S = 100 Ω, V_I = 0 V, f = 1 kHz (see Figure 2)	40	nV/√Hz

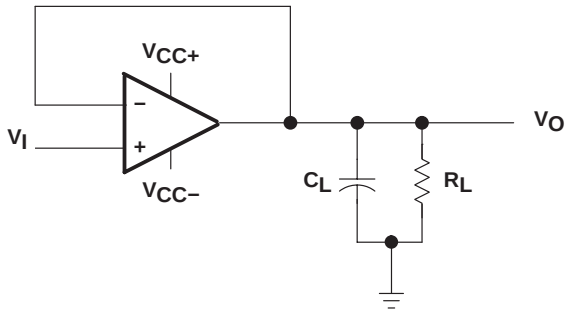

Figure 1. Unity-Gain Amplifier

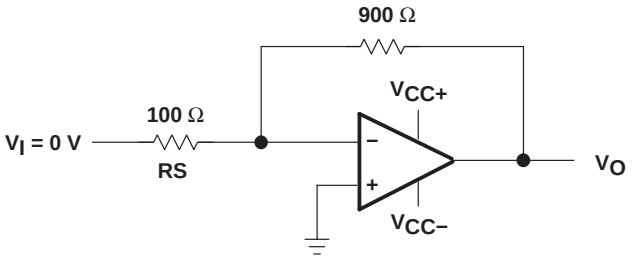

Figure 2. Noise-Test Circuit

PACKAGING INFORMATION

Orderable Device	Status (1)	Package Type	Package Drawing	Pins	Package Qty	Eco Plan (2)	Lead/Ball Finish	MSL Peak Temp (3)
5962-87710012A	ACTIVE	LCCC	FK	20	1	TBD	POST-PLATE	N / A for Pkg Type
5962-8771001PA	ACTIVE	CDIP	JG	8	1	TBD	A42 SNPB	N / A for Pkg Type
5962-87710022A	ACTIVE	LCCC	FK	20	1	TBD	POST-PLATE	N / A for Pkg Type
5962-8771002PA	ACTIVE	CDIP	JG	8	1	TBD	A42 SNPB	N / A for Pkg Type
LM158AFKB	ACTIVE	LCCC	FK	20	1	TBD	POST-PLATE	N / A for Pkg Type
LM158AJG	ACTIVE	CDIP	JG	8	1	TBD	A42 SNPB	N / A for Pkg Type
LM158AJGB	ACTIVE	CDIP	JG	8	1	TBD	A42 SNPB	N / A for Pkg Type
LM158FKB	ACTIVE	LCCC	FK	20	1	TBD	POST-PLATE	N / A for Pkg Type
LM158JG	ACTIVE	CDIP	JG	8	1	TBD	A42 SNPB	N / A for Pkg Type
LM158JGB	ACTIVE	CDIP	JG	8	1	TBD	A42 SNPB	N / A for Pkg Type
LM258AD	ACTIVE	SOIC	D	8	75	Green (RoHS & no Sb/Br)	CU NIPDAU	Level-1-260C-UNLIM
LM258ADE4	ACTIVE	SOIC	D	8	75	Green (RoHS & no Sb/Br)	CU NIPDAU	Level-1-260C-UNLIM
LM258ADG4	ACTIVE	SOIC	D	8	75	Green (RoHS & no Sb/Br)	CU NIPDAU	Level-1-260C-UNLIM
LM258ADGKR	ACTIVE	MSOP	DGK	8	2500	Green (RoHS & no Sb/Br)	CU NIPDAU	Level-1-260C-UNLIM
LM258ADGKRG4	ACTIVE	MSOP	DGK	8	2500	Green (RoHS & no Sb/Br)	CU NIPDAU	Level-1-260C-UNLIM
LM258ADR	ACTIVE	SOIC	D	8	2500	Green (RoHS & no Sb/Br)	CU NIPDAU	Level-1-260C-UNLIM
LM258ADRE4	ACTIVE	SOIC	D	8	2500	Green (RoHS & no Sb/Br)	CU NIPDAU	Level-1-260C-UNLIM
LM258ADRG4	ACTIVE	SOIC	D	8	2500	Green (RoHS & no Sb/Br)	CU NIPDAU	Level-1-260C-UNLIM
LM258AP	ACTIVE	PDIP	P	8	50	Pb-Free (RoHS)	CU NIPDAU	N / A for Pkg Type
LM258APE4	ACTIVE	PDIP	P	8	50	Pb-Free (RoHS)	CU NIPDAU	N / A for Pkg Type
LM258D	ACTIVE	SOIC	D	8	75	Green (RoHS & no Sb/Br)	CU NIPDAU	Level-1-260C-UNLIM
LM258DE4	ACTIVE	SOIC	D	8	75	Green (RoHS & no Sb/Br)	CU NIPDAU	Level-1-260C-UNLIM
LM258DG4	ACTIVE	SOIC	D	8	75	Green (RoHS & no Sb/Br)	CU NIPDAU	Level-1-260C-UNLIM
LM258DGKR	ACTIVE	MSOP	DGK	8	2500	Green (RoHS & no Sb/Br)	CU NIPDAU	Level-1-260C-UNLIM
LM258DGKRG4	ACTIVE	MSOP	DGK	8	2500	Green (RoHS & no Sb/Br)	CU NIPDAU	Level-1-260C-UNLIM
LM258DR	ACTIVE	SOIC	D	8	2500	Green (RoHS & no Sb/Br)	CU NIPDAU	Level-1-260C-UNLIM
LM258DRE4	ACTIVE	SOIC	D	8	2500	Green (RoHS & no Sb/Br)	CU NIPDAU	Level-1-260C-UNLIM
LM258DRG4	ACTIVE	SOIC	D	8	2500	Green (RoHS & no Sb/Br)	CU NIPDAU	Level-1-260C-UNLIM
LM258P	ACTIVE	PDIP	P	8	50	Pb-Free (RoHS)	CU NIPDAU	N / A for Pkg Type

Orderable Device	Status (1)	Package Type	Package Drawing	Pins	Package Qty	Eco Plan (2)	Lead/Ball Finish	MSL Peak Temp (3)
LM258PE4	ACTIVE	PDIP	P	8	50	Pb-Free (RoHS)	CU NIPDAU	N / A for Pkg Type
LM2904AVQDR	ACTIVE	SOIC	D	8	2500	Pb-Free (RoHS)	CU NIPDAU	Level-2-250C-1 YEAR/ Level-1-235C-UNLIM
LM2904AVQDRG4	ACTIVE	SOIC	D	8	2500	Green (RoHS & no Sb/Br)	CU NIPDAU	Level-1-260C-UNLIM
LM2904AVQPWR	ACTIVE	TSSOP	PW	8	2000	TBD	CU NIPDAU	Level-1-250C-UNLIM
LM2904AVQPWRG4	ACTIVE	TSSOP	PW	8	2000	Green (RoHS & no Sb/Br)	CU NIPDAU	Level-1-260C-UNLIM
LM2904D	ACTIVE	SOIC	D	8	75	Green (RoHS & no Sb/Br)	CU NIPDAU	Level-1-260C-UNLIM
LM2904DE4	ACTIVE	SOIC	D	8	75	Green (RoHS & no Sb/Br)	CU NIPDAU	Level-1-260C-UNLIM
LM2904DG4	ACTIVE	SOIC	D	8	75	Green (RoHS & no Sb/Br)	CU NIPDAU	Level-1-260C-UNLIM
LM2904DGKR	ACTIVE	MSOP	DGK	8	2500	Green (RoHS & no Sb/Br)	CU NIPDAU	Level-1-260C-UNLIM
LM2904DGKRG4	ACTIVE	MSOP	DGK	8	2500	Green (RoHS & no Sb/Br)	CU NIPDAU	Level-1-260C-UNLIM
LM2904DR	ACTIVE	SOIC	D	8	2500	Green (RoHS & no Sb/Br)	CU NIPDAU	Level-1-260C-UNLIM
LM2904DRE4	ACTIVE	SOIC	D	8	2500	Green (RoHS & no Sb/Br)	CU NIPDAU	Level-1-260C-UNLIM
LM2904DRG4	ACTIVE	SOIC	D	8	2500	Green (RoHS & no Sb/Br)	CU NIPDAU	Level-1-260C-UNLIM
LM2904P	ACTIVE	PDIP	P	8	50	Pb-Free (RoHS)	CU NIPDAU	N / A for Pkg Type
LM2904PE4	ACTIVE	PDIP	P	8	50	Pb-Free (RoHS)	CU NIPDAU	N / A for Pkg Type
LM2904PSR	ACTIVE	SO	PS	8	2000	Green (RoHS & no Sb/Br)	CU NIPDAU	Level-1-260C-UNLIM
LM2904PSRE4	ACTIVE	SO	PS	8	2000	Green (RoHS & no Sb/Br)	CU NIPDAU	Level-1-260C-UNLIM
LM2904PSRG4	ACTIVE	SO	PS	8	2000	Green (RoHS & no Sb/Br)	CU NIPDAU	Level-1-260C-UNLIM
LM2904PW	ACTIVE	TSSOP	PW	8	150	Green (RoHS & no Sb/Br)	CU NIPDAU	Level-1-260C-UNLIM
LM2904PWE4	ACTIVE	TSSOP	PW	8	150	Green (RoHS & no Sb/Br)	CU NIPDAU	Level-1-260C-UNLIM
LM2904PWG4	ACTIVE	TSSOP	PW	8	150	Green (RoHS & no Sb/Br)	CU NIPDAU	Level-1-260C-UNLIM
LM2904PWLE	OBSOLETE	TSSOP	PW	8		TBD	Call TI	Call TI
LM2904PWR	ACTIVE	TSSOP	PW	8	2000	Green (RoHS & no Sb/Br)	CU NIPDAU	Level-1-260C-UNLIM
LM2904PWRE4	ACTIVE	TSSOP	PW	8	2000	Green (RoHS & no Sb/Br)	CU NIPDAU	Level-1-260C-UNLIM
LM2904PWRG4	ACTIVE	TSSOP	PW	8	2000	Green (RoHS & no Sb/Br)	CU NIPDAU	Level-1-260C-UNLIM
LM2904QD	OBSOLETE	SOIC	D	8		TBD	Call TI	Call TI
LM2904QDR	NRND	SOIC	D	8	2500	Pb-Free (RoHS)	CU NIPDAU	Level-2-250C-1 YEAR/ Level-1-235C-UNLIM

Orderable Device	Status (1)	Package Type	Package Drawing	Pins	Package Qty	Eco Plan (2)	Lead/Ball Finish	MSL Peak Temp (3)
LM2904QP	OBSOLETE	PDIP	P	8		TBD	Call TI	Call TI
LM2904VQDR	ACTIVE	SOIC	D	8	2500	Pb-Free (RoHS)	CU NIPDAU	Level-2-250C-1 YEAR/ Level-1-235C-UNLIM
LM2904VQDRG4	ACTIVE	SOIC	D	8	2500	Green (RoHS & no Sb/Br)	CU NIPDAU	Level-1-260C-UNLIM
LM2904VQPWR	ACTIVE	TSSOP	PW	8	2000	TBD	CU NIPDAU	Level-1-250C-UNLIM
LM2904VQPWRG4	ACTIVE	TSSOP	PW	8	2000	Green (RoHS & no Sb/Br)	CU NIPDAU	Level-1-260C-UNLIM
LM358AD	ACTIVE	SOIC	D	8	75	Green (RoHS & no Sb/Br)	CU NIPDAU	Level-1-260C-UNLIM
LM358ADE4	ACTIVE	SOIC	D	8	75	Green (RoHS & no Sb/Br)	CU NIPDAU	Level-1-260C-UNLIM
LM358ADG4	ACTIVE	SOIC	D	8	75	Green (RoHS & no Sb/Br)	CU NIPDAU	Level-1-260C-UNLIM
LM358ADGKR	ACTIVE	MSOP	DGK	8	2500	Green (RoHS & no Sb/Br)	CU NIPDAU	Level-1-260C-UNLIM
LM358ADGKRG4	ACTIVE	MSOP	DGK	8	2500	Green (RoHS & no Sb/Br)	CU NIPDAU	Level-1-260C-UNLIM
LM358ADR	ACTIVE	SOIC	D	8	2500	Green (RoHS & no Sb/Br)	CU NIPDAU	Level-1-260C-UNLIM
LM358ADRE4	ACTIVE	SOIC	D	8	2500	Green (RoHS & no Sb/Br)	CU NIPDAU	Level-1-260C-UNLIM
LM358ADRG4	ACTIVE	SOIC	D	8	2500	Green (RoHS & no Sb/Br)	CU NIPDAU	Level-1-260C-UNLIM
LM358AP	ACTIVE	PDIP	P	8	50	Pb-Free (RoHS)	CU NIPDAU	N / A for Pkg Type
LM358APE4	ACTIVE	PDIP	P	8	50	Pb-Free (RoHS)	CU NIPDAU	N / A for Pkg Type
LM358APW	ACTIVE	TSSOP	PW	8	150	Green (RoHS & no Sb/Br)	CU NIPDAU	Level-1-260C-UNLIM
LM358APWE4	ACTIVE	TSSOP	PW	8	150	Green (RoHS & no Sb/Br)	CU NIPDAU	Level-1-260C-UNLIM
LM358APWG4	ACTIVE	TSSOP	PW	8	150	Green (RoHS & no Sb/Br)	CU NIPDAU	Level-1-260C-UNLIM
LM358APWR	ACTIVE	TSSOP	PW	8	2000	Green (RoHS & no Sb/Br)	CU NIPDAU	Level-1-260C-UNLIM
LM358APWRE4	ACTIVE	TSSOP	PW	8	2000	Green (RoHS & no Sb/Br)	CU NIPDAU	Level-1-260C-UNLIM
LM358APWRG4	ACTIVE	TSSOP	PW	8	2000	Green (RoHS & no Sb/Br)	CU NIPDAU	Level-1-260C-UNLIM
LM358D	ACTIVE	SOIC	D	8	75	Green (RoHS & no Sb/Br)	CU NIPDAU	Level-1-260C-UNLIM
LM358DE4	ACTIVE	SOIC	D	8	75	Green (RoHS & no Sb/Br)	CU NIPDAU	Level-1-260C-UNLIM
LM358DG4	ACTIVE	SOIC	D	8	75	Green (RoHS & no Sb/Br)	CU NIPDAU	Level-1-260C-UNLIM
LM358DGKR	ACTIVE	MSOP	DGK	8	2500	Green (RoHS & no Sb/Br)	CU NIPDAU	Level-1-260C-UNLIM
LM358DGKRG4	ACTIVE	MSOP	DGK	8	2500	Green (RoHS & no Sb/Br)	CU NIPDAU	Level-1-260C-UNLIM
LM358DR	ACTIVE	SOIC	D	8	2500	Green (RoHS &	CU NIPDAU	Level-1-260C-UNLIM

Orderable Device	Status (1)	Package Type	Package Drawing	Pins	Package Qty	Eco Plan (2)	Lead/Ball Finish	MSL Peak Temp (3)
						no Sb/Br)		
LM358DRE4	ACTIVE	SOIC	D	8	2500	Green (RoHS & no Sb/Br)	CU NIPDAU	Level-1-260C-UNLIM
LM358DRG4	ACTIVE	SOIC	D	8	2500	Green (RoHS & no Sb/Br)	CU NIPDAU	Level-1-260C-UNLIM
LM358P	ACTIVE	PDIP	P	8	50	Pb-Free (RoHS)	CU NIPDAU	N / A for Pkg Type
LM358PE4	ACTIVE	PDIP	P	8	50	Pb-Free (RoHS)	CU NIPDAU	N / A for Pkg Type
LM358PSLE	OBSOLETE	SO	PS	8		TBD	Call TI	Call TI
LM358PSR	ACTIVE	SO	PS	8	2000	Green (RoHS & no Sb/Br)	CU NIPDAU	Level-1-260C-UNLIM
LM358PSRE4	ACTIVE	SO	PS	8	2000	Green (RoHS & no Sb/Br)	CU NIPDAU	Level-1-260C-UNLIM
LM358PSRG4	ACTIVE	SO	PS	8	2000	Green (RoHS & no Sb/Br)	CU NIPDAU	Level-1-260C-UNLIM
LM358PW	ACTIVE	TSSOP	PW	8	150	Green (RoHS & no Sb/Br)	CU NIPDAU	Level-1-260C-UNLIM
LM358PWE4	ACTIVE	TSSOP	PW	8	150	Green (RoHS & no Sb/Br)	CU NIPDAU	Level-1-260C-UNLIM
LM358PWG4	ACTIVE	TSSOP	PW	8	150	Green (RoHS & no Sb/Br)	CU NIPDAU	Level-1-260C-UNLIM
LM358PWLE	OBSOLETE	TSSOP	PW	8		TBD	Call TI	Call TI
LM358PWR	ACTIVE	TSSOP	PW	8	2000	Green (RoHS & no Sb/Br)	CU NIPDAU	Level-1-260C-UNLIM
LM358PWRE4	ACTIVE	TSSOP	PW	8	2000	Green (RoHS & no Sb/Br)	CU NIPDAU	Level-1-260C-UNLIM
LM358PWRG4	ACTIVE	TSSOP	PW	8	2000	Green (RoHS & no Sb/Br)	CU NIPDAU	Level-1-260C-UNLIM

(1) The marketing status values are defined as follows:
ACTIVE: Product device recommended for new designs.
LIFEBUY: TI has announced that the device will be discontinued, and a lifetime-buy period is in effect.
NRND: Not recommended for new designs. Device is in production to support existing customers, but TI does not recommend using this part in a new design.
PREVIEW: Device has been announced but is not in production. Samples may or may not be available.
OBSOLETE: TI has discontinued the production of the device.

(2) Eco Plan - The planned eco-friendly classification: Pb-Free (RoHS), Pb-Free (RoHS Exempt), or Green (RoHS & no Sb/Br) - please check http://www.ti.com/productcontent for the latest availability information and additional product content details.
TBD: The Pb-Free/Green conversion plan has not been defined.
Pb-Free (RoHS): TI's terms "Lead-Free" or "Pb-Free" mean semiconductor products that are compatible with the current RoHS requirements for all 6 substances, including the requirement that lead not exceed 0.1% by weight in homogeneous materials. Where designed to be soldered at high temperatures, TI Pb-Free products are suitable for use in specified lead-free processes.
Pb-Free (RoHS Exempt): This component has a RoHS exemption for either 1) lead-based flip-chip solder bumps used between the die and package, or 2) lead-based die adhesive used between the die and leadframe. The component is otherwise considered Pb-Free (RoHS compatible) as defined above.
Green (RoHS & no Sb/Br): TI defines "Green" to mean Pb-Free (RoHS compatible), and free of Bromine (Br) and Antimony (Sb) based flame retardants (Br or Sb do not exceed 0.1% by weight in homogeneous material)

(3) MSL, Peak Temp. -- The Moisture Sensitivity Level rating according to the JEDEC industry standard classifications, and peak solder temperature.

Important Information and Disclaimer: The information provided on this page represents TI's knowledge and belief as of the date that it is

provided. TI bases its knowledge and belief on information provided by third parties, and makes no representation or warranty as to the accuracy of such information. Efforts are underway to better integrate information from third parties. TI has taken and continues to take reasonable steps to provide representative and accurate information but may not have conducted destructive testing or chemical analysis on incoming materials and chemicals. TI and TI suppliers consider certain information to be proprietary, and thus CAS numbers and other limited information may not be available for release.

In no event shall TI's liability arising out of such information exceed the total purchase price of the TI part(s) at issue in this document sold by TI to Customer on an annual basis.

OTHER QUALIFIED VERSIONS OF LM258A, LM2904 :

- Automotive: LM2904-Q1
- Enhanced Product: LM258A-EP

NOTE: Qualified Version Definitions:

- Automotive - Q100 devices qualified for high-reliability automotive applications targeting zero defects
- Enhanced Product - Supports Defense, Aerospace and Medical Applications

TAPE AND REEL INFORMATION

REEL DIMENSIONS

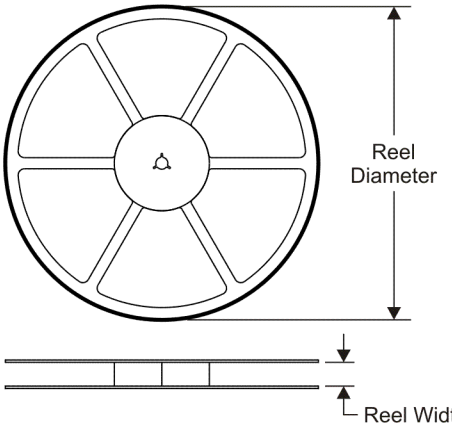

TAPE DIMENSIONS

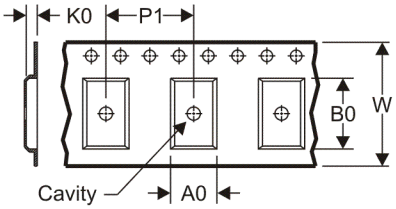

A0	Dimension designed to accommodate the component width
B0	Dimension designed to accommodate the component length
K0	Dimension designed to accommodate the component thickness
W	Overall width of the carrier tape
P1	Pitch between successive cavity centers

QUADRANT ASSIGNMENTS FOR PIN 1 ORIENTATION IN TAPE

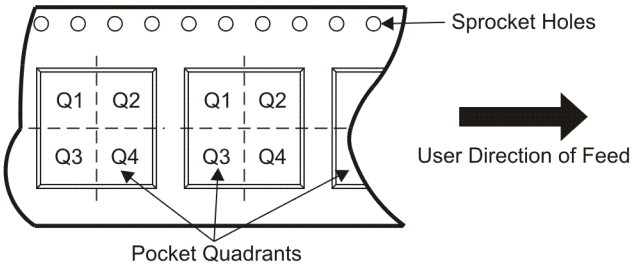

*All dimensions are nominal

Device	Package Type	Package Drawing	Pins	SPQ	Reel Diameter (mm)	Reel Width W1 (mm)	A0 (mm)	B0 (mm)	K0 (mm)	P1 (mm)	W (mm)	Pin1 Quadrant
LM258ADGKR	MSOP	DGK	8	2500	330.0	12.4	5.3	3.3	1.3	8.0	12.0	Q1
LM258ADGKR	MSOP	DGK	8	2500	330.0	13.0	5.3	3.4	1.4	8.0	12.0	Q1
LM258ADR	SOIC	D	8	2500	330.0	12.4	6.4	5.2	2.1	8.0	12.0	Q1
LM258ADR	SOIC	D	8	2500	330.0	12.4	6.4	5.2	2.1	8.0	12.0	Q1
LM258DGKR	MSOP	DGK	8	2500	330.0	13.0	5.3	3.4	1.4	8.0	12.0	Q1
LM258DGKR	MSOP	DGK	8	2500	330.0	12.4	5.3	3.3	1.3	8.0	12.0	Q1
LM258DR	SOIC	D	8	2500	330.0	12.4	6.4	5.2	2.1	8.0	12.0	Q1
LM258DR	SOIC	D	8	2500	330.0	12.4	6.4	5.2	2.1	8.0	12.0	Q1
LM2904DGKR	MSOP	DGK	8	2500	330.0	12.4	5.3	3.3	1.3	8.0	12.0	Q1
LM2904DGKR	MSOP	DGK	8	2500	330.0	13.0	5.3	3.4	1.4	8.0	12.0	Q1
LM2904DR	SOIC	D	8	2500	330.0	12.4	6.4	5.2	2.1	8.0	12.0	Q1
LM2904DR	SOIC	D	8	2500	330.0	12.4	6.4	5.2	2.1	8.0	12.0	Q1
LM2904PSR	SO	PS	8	2000	330.0	16.4	8.2	6.6	2.5	12.0	16.0	Q1
LM2904PWR	TSSOP	PW	8	2000	330.0	12.4	7.0	3.6	1.6	8.0	12.0	Q1
LM358ADGKR	MSOP	DGK	8	2500	330.0	12.4	5.3	3.3	1.3	8.0	12.0	Q1
LM358ADGKR	MSOP	DGK	8	2500	330.0	13.0	5.3	3.4	1.4	8.0	12.0	Q1
LM358ADR	SOIC	D	8	2500	330.0	12.4	6.4	5.2	2.1	8.0	12.0	Q1
LM358ADR	SOIC	D	8	2500	330.0	12.4	6.4	5.2	2.1	8.0	12.0	Q1

Device	Package Type	Package Drawing	Pins	SPQ	Reel Diameter (mm)	Reel Width W1 (mm)	A0 (mm)	B0 (mm)	K0 (mm)	P1 (mm)	W (mm)	Pin1 Quadrant
LM358APWR	TSSOP	PW	8	2000	330.0	12.4	7.0	3.6	1.6	8.0	12.0	Q1
LM358DGKR	MSOP	DGK	8	2500	330.0	12.4	5.3	3.3	1.3	8.0	12.0	Q1
LM358DGKR	MSOP	DGK	8	2500	330.0	13.0	5.3	3.4	1.4	8.0	12.0	Q1
LM358DR	SOIC	D	8	2500	330.0	12.4	6.4	5.2	2.1	8.0	12.0	Q1
LM358DR	SOIC	D	8	2500	330.0	12.4	6.4	5.2	2.1	8.0	12.0	Q1
LM358PSR	SO	PS	8	2000	330.0	16.4	8.2	6.6	2.5	12.0	16.0	Q1
LM358PWR	TSSOP	PW	8	2000	330.0	12.4	7.0	3.6	1.6	8.0	12.0	Q1

TAPE AND REEL BOX DIMENSIONS

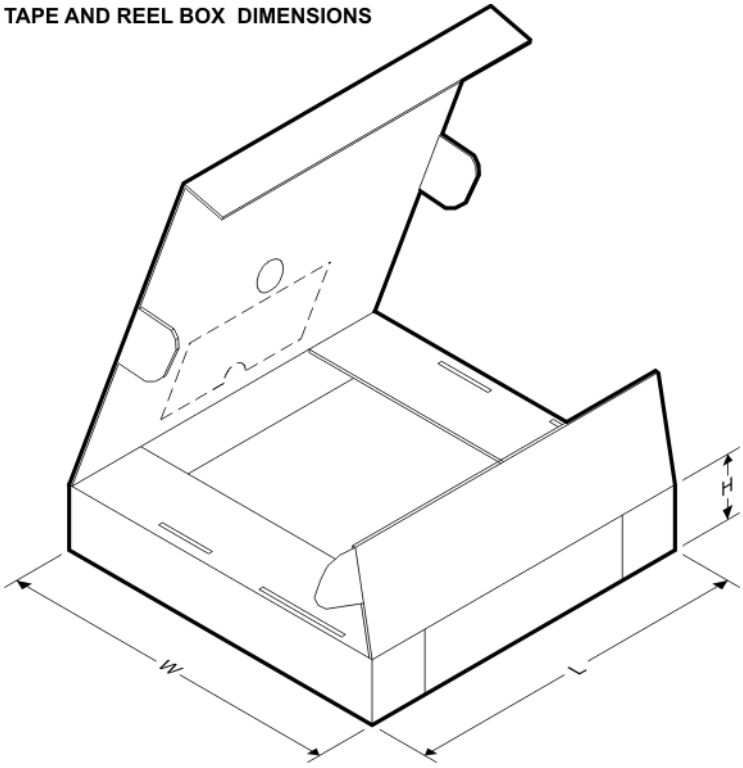

*All dimensions are nominal

Device	Package Type	Package Drawing	Pins	SPQ	Length (mm)	Width (mm)	Height (mm)
LM258ADGKR	MSOP	DGK	8	2500	370.0	355.0	55.0
LM258ADGKR	MSOP	DGK	8	2500	358.0	335.0	35.0
LM258ADR	SOIC	D	8	2500	346.0	346.0	29.0
LM258ADR	SOIC	D	8	2500	340.5	338.1	20.6
LM258DGKR	MSOP	DGK	8	2500	358.0	335.0	35.0
LM258DGKR	MSOP	DGK	8	2500	370.0	355.0	55.0
LM258DR	SOIC	D	8	2500	346.0	346.0	29.0
LM258DR	SOIC	D	8	2500	340.5	338.1	20.6
LM2904DGKR	MSOP	DGK	8	2500	370.0	355.0	55.0
LM2904DGKR	MSOP	DGK	8	2500	358.0	335.0	35.0

Device	Package Type	Package Drawing	Pins	SPQ	Length (mm)	Width (mm)	Height (mm)
LM2904DR	SOIC	D	8	2500	340.5	338.1	20.6
LM2904DR	SOIC	D	8	2500	346.0	346.0	29.0
LM2904PSR	SO	PS	8	2000	346.0	346.0	33.0
LM2904PWR	TSSOP	PW	8	2000	346.0	346.0	29.0
LM358ADGKR	MSOP	DGK	8	2500	370.0	355.0	55.0
LM358ADGKR	MSOP	DGK	8	2500	358.0	335.0	35.0
LM358ADR	SOIC	D	8	2500	346.0	346.0	29.0
LM358ADR	SOIC	D	8	2500	340.5	338.1	20.6
LM358APWR	TSSOP	PW	8	2000	346.0	346.0	29.0
LM358DGKR	MSOP	DGK	8	2500	370.0	355.0	55.0
LM358DGKR	MSOP	DGK	8	2500	358.0	335.0	35.0
LM358DR	SOIC	D	8	2500	340.5	338.1	20.6
LM358DR	SOIC	D	8	2500	346.0	346.0	29.0
LM358PSR	SO	PS	8	2000	346.0	346.0	33.0
LM358PWR	TSSOP	PW	8	2000	346.0	346.0	29.0

D (R–PDSO–G8) PLASTIC SMALL–OUTLINE PACKAGE

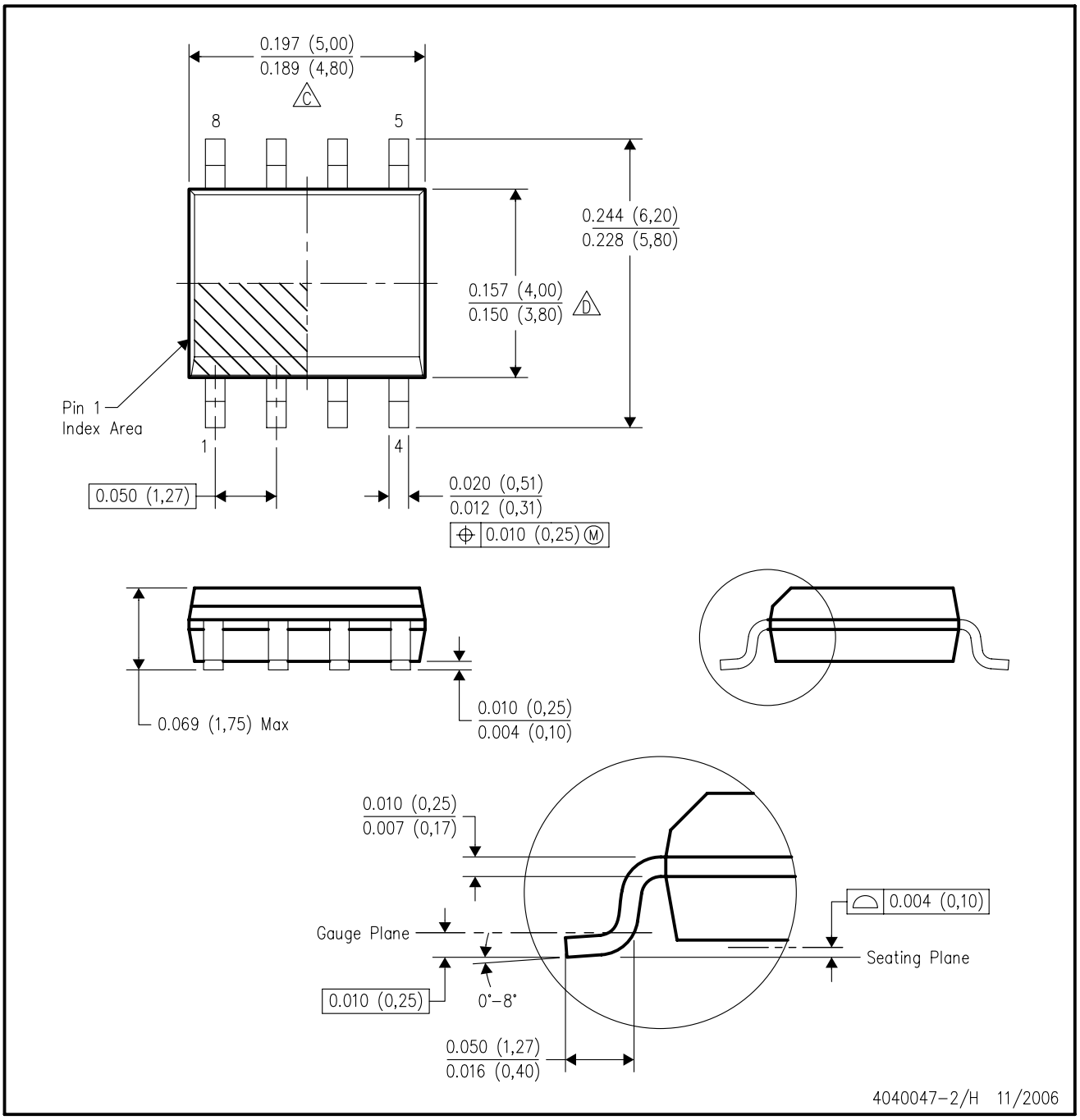

NOTES:
- A. All linear dimensions are in inches (millimeters).
- B. This drawing is subject to change without notice.
- C. Body length does not include mold flash, protrusions, or gate burrs. Mold flash, protrusions, or gate burrs shall not exceed .006 (0,15) per end.
- D. Body width does not include interlead flash. Interlead flash shall not exceed .017 (0,43) per side.
- E. Reference JEDEC MS–012 variation AA.

PW (R-PDSO-G)** **PLASTIC SMALL-OUTLINE PACKAGE**

14 PINS SHOWN

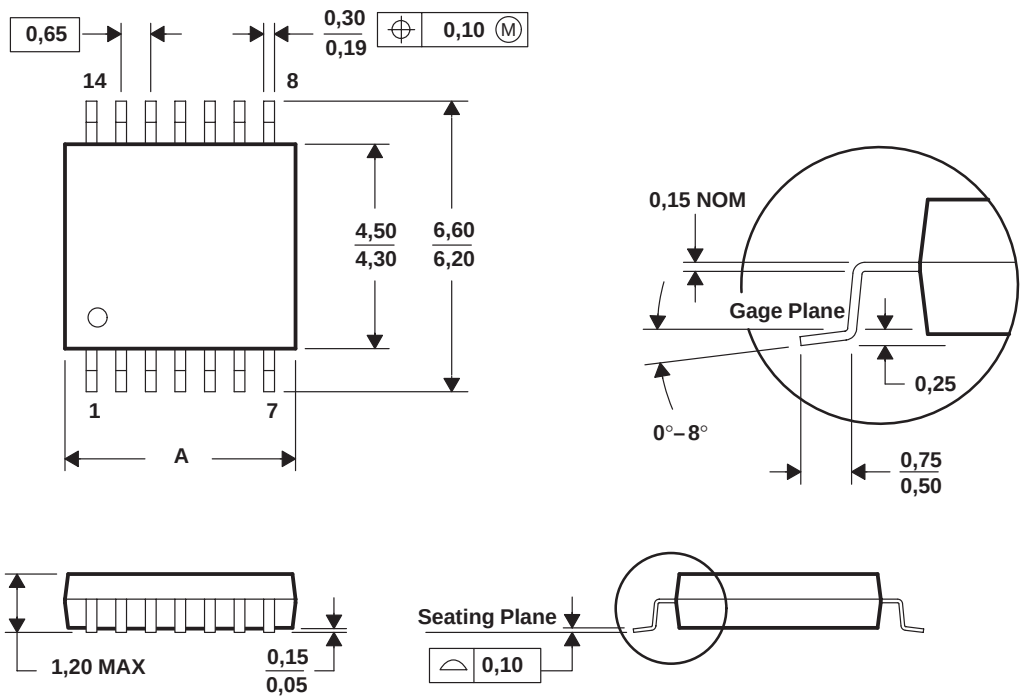

DIM \ PINS **	8	14	16	20	24	28
A MAX	3,10	5,10	5,10	6,60	7,90	9,80
A MIN	2,90	4,90	4,90	6,40	7,70	9,60

4040064/F 01/97

NOTES: A. All linear dimensions are in millimeters.
B. This drawing is subject to change without notice.
C. Body dimensions do not include mold flash or protrusion not to exceed 0,15.
D. Falls within JEDEC MO-153

FK (S-CQCC-N**)

LEADLESS CERAMIC CHIP CARRIER

28 TERMINAL SHOWN

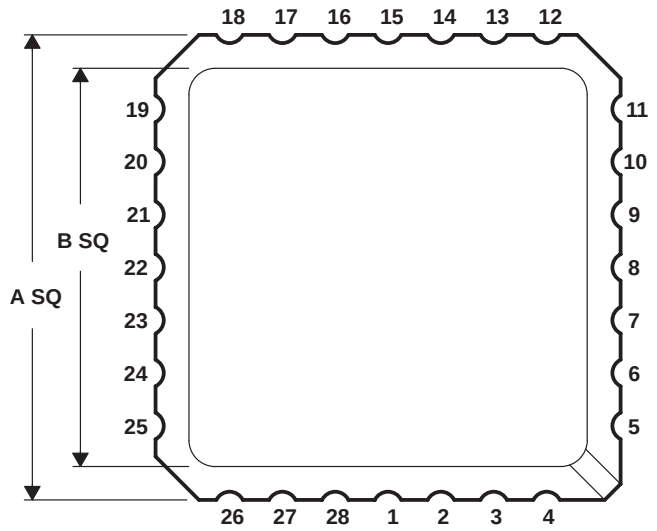

NO. OF TERMINALS **	A		B	
	MIN	MAX	MIN	MAX
20	0.342 (8,69)	0.358 (9,09)	0.307 (7,80)	0.358 (9,09)
28	0.442 (11,23)	0.458 (11,63)	0.406 (10,31)	0.458 (11,63)
44	0.640 (16,26)	0.660 (16,76)	0.495 (12,58)	0.560 (14,22)
52	0.739 (18,78)	0.761 (19,32)	0.495 (12,58)	0.560 (14,22)
68	0.938 (23,83)	0.962 (24,43)	0.850 (21,6)	0.858 (21,8)
84	1.141 (28,99)	1.165 (29,59)	1.047 (26,6)	1.063 (27,0)

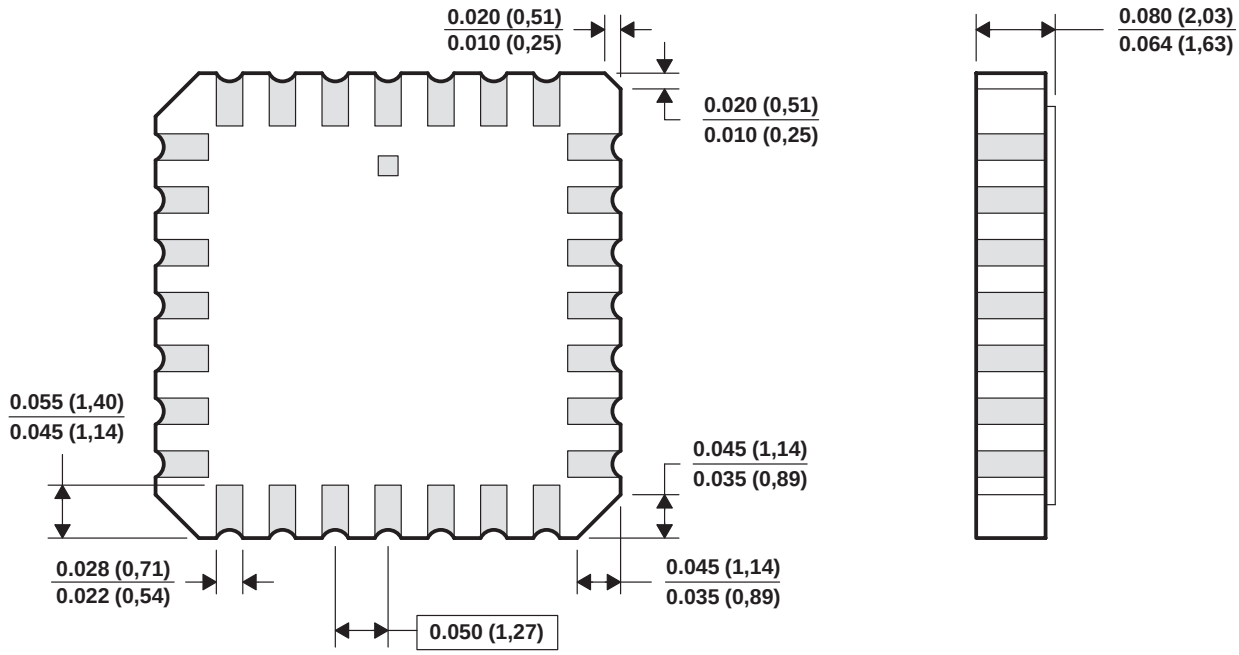

4040140/D 10/96

NOTES:
A. All linear dimensions are in inches (millimeters).
B. This drawing is subject to change without notice.
C. This package can be hermetically sealed with a metal lid.
D. The terminals are gold plated.
E. Falls within JEDEC MS-004

MECHANICAL DATA

PS (R-PDSO-G8) **PLASTIC SMALL-OUTLINE PACKAGE**

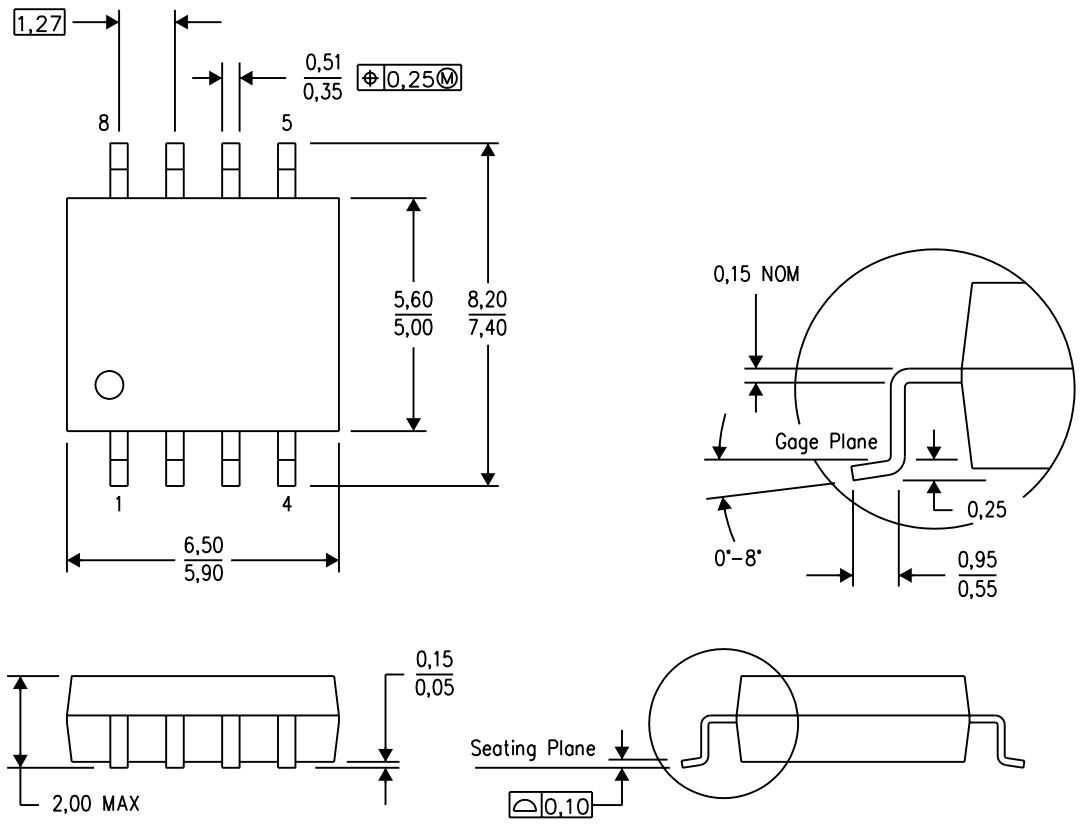

NOTES:
A. All linear dimensions are in millimeters.
B. This drawing is subject to change without notice.
C. Body dimensions do not include mold flash or protrusion, not to exceed 0,15.

DGK (S–PDSO–G8) PLASTIC SMALL–OUTLINE PACKAGE

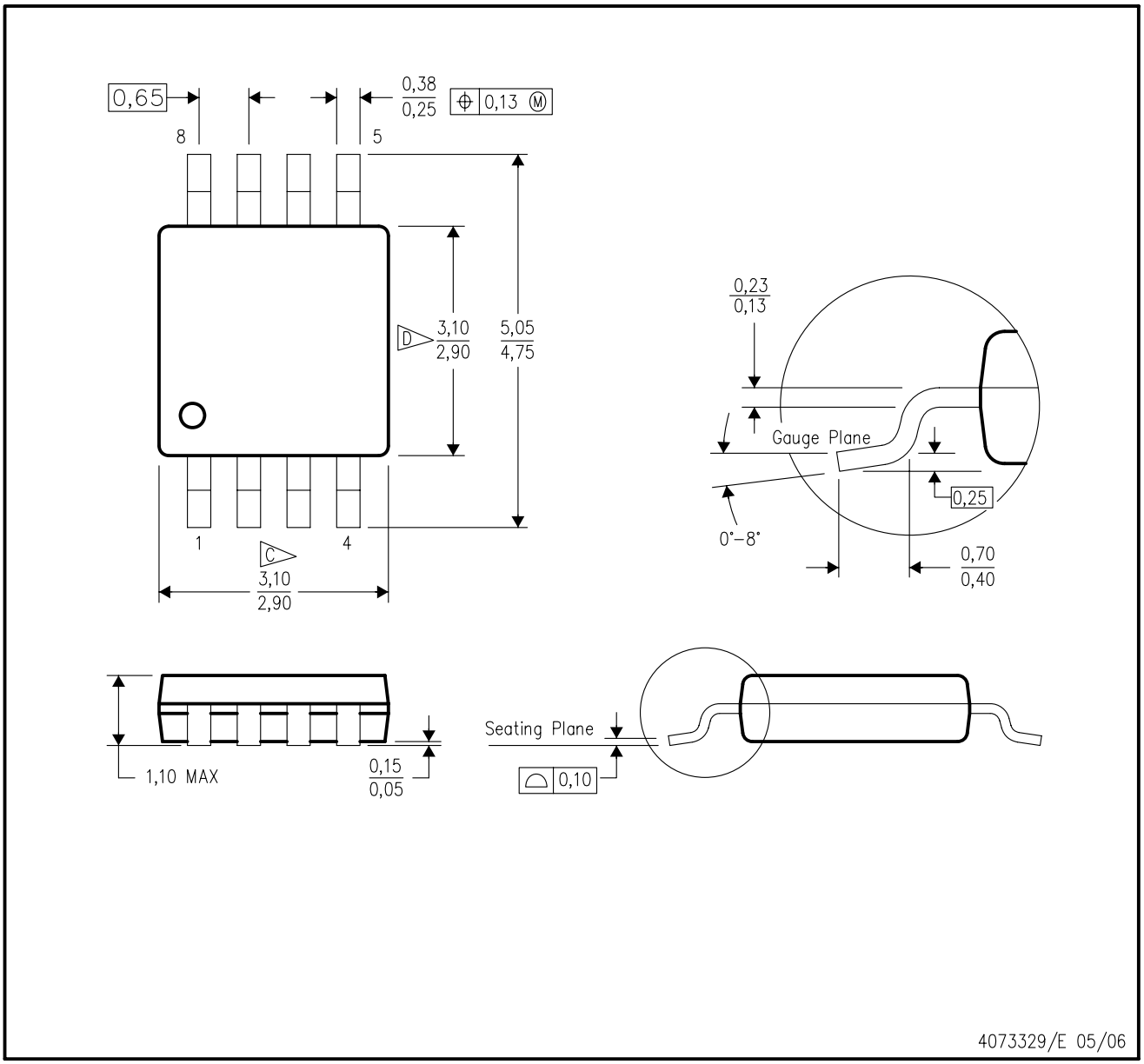

NOTES:
A. All linear dimensions are in millimeters.
B. This drawing is subject to change without notice.
C. Body length does not include mold flash, protrusions, or gate burrs. Mold flash, protrusions, or gate burrs shall not exceed 0.15 per end.
D. Body width does not include interlead flash. Interlead flash shall not exceed 0.50 per side.
E. Falls within JEDEC MO–187 variation AA, except interlead flash.

P (R-PDIP-T8) **PLASTIC DUAL-IN-LINE**

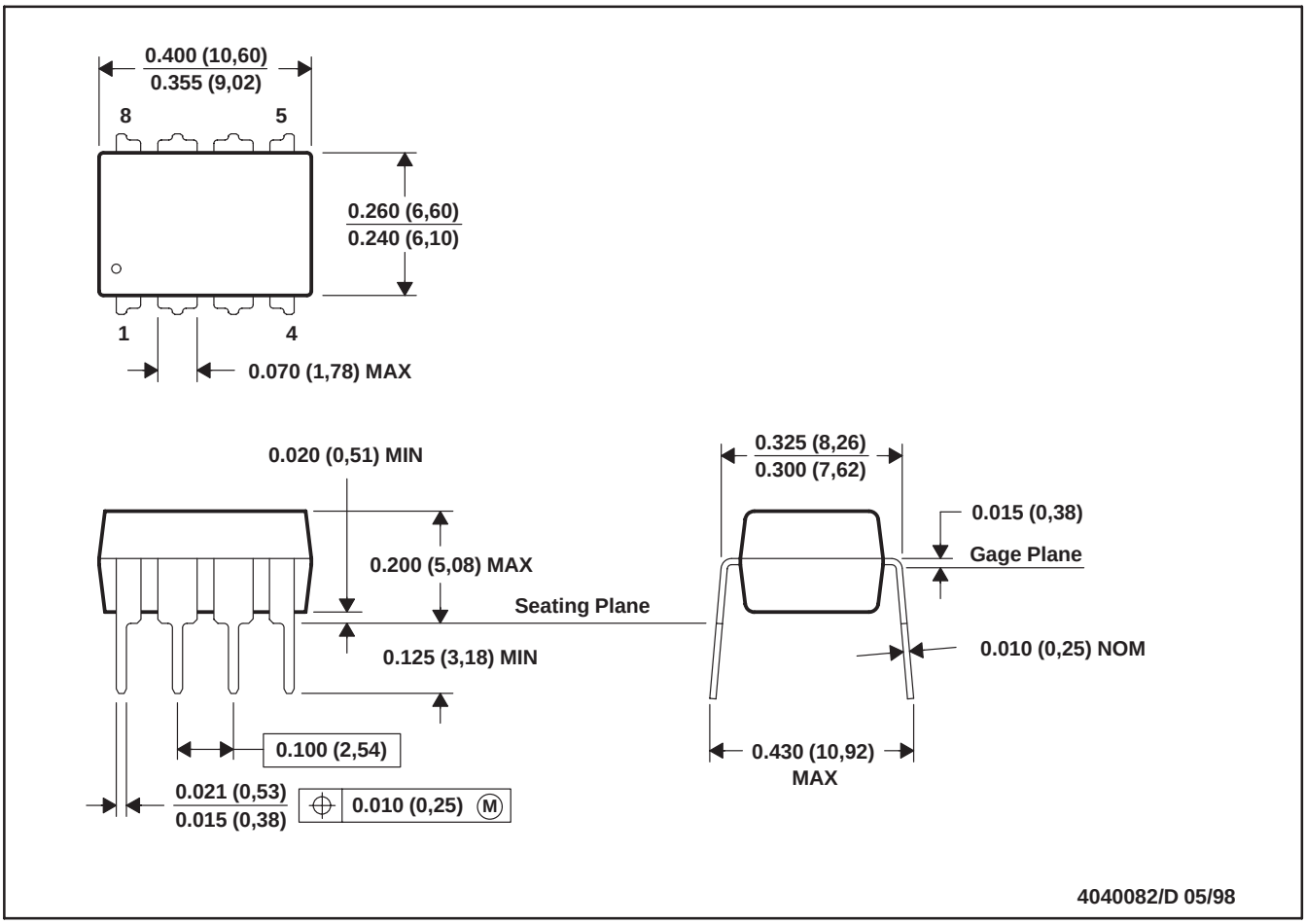

NOTES: A. All linear dimensions are in inches (millimeters).
B. This drawing is subject to change without notice.
C. Falls within JEDEC MS-001

JG (R-GDIP-T8) **CERAMIC DUAL-IN-LINE**

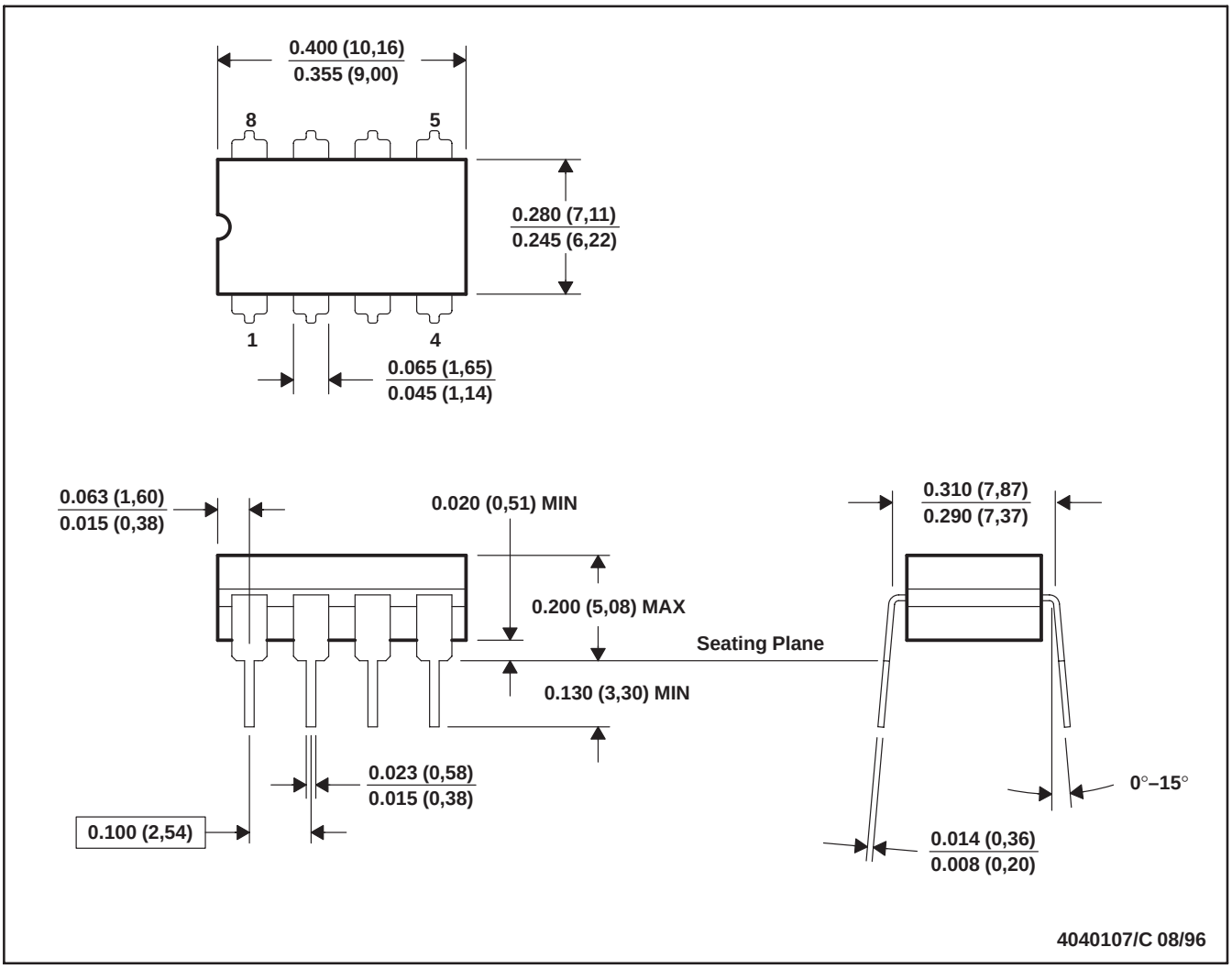

NOTES: A. All linear dimensions are in inches (millimeters).
B. This drawing is subject to change without notice.
C. This package can be hermetically sealed with a ceramic lid using glass frit.
D. Index point is provided on cap for terminal identification.
E. Falls within MIL STD 1835 GDIP1-T8

IMPORTANT NOTICE

Texas Instruments Incorporated and its subsidiaries (TI) reserve the right to make corrections, modifications, enhancements, improvements, and other changes to its products and services at any time and to discontinue any product or service without notice. Customers should obtain the latest relevant information before placing orders and should verify that such information is current and complete. All products are sold subject to TI's terms and conditions of sale supplied at the time of order acknowledgment.

TI warrants performance of its hardware products to the specifications applicable at the time of sale in accordance with TI's standard warranty. Testing and other quality control techniques are used to the extent TI deems necessary to support this warranty. Except where mandated by government requirements, testing of all parameters of each product is not necessarily performed.

TI assumes no liability for applications assistance or customer product design. Customers are responsible for their products and applications using TI components. To minimize the risks associated with customer products and applications, customers should provide adequate design and operating safeguards.

TI does not warrant or represent that any license, either express or implied, is granted under any TI patent right, copyright, mask work right, or other TI intellectual property right relating to any combination, machine, or process in which TI products or services are used. Information published by TI regarding third-party products or services does not constitute a license from TI to use such products or services or a warranty or endorsement thereof. Use of such information may require a license from a third party under the patents or other intellectual property of the third party, or a license from TI under the patents or other intellectual property of TI.

Reproduction of TI information in TI data books or data sheets is permissible only if reproduction is without alteration and is accompanied by all associated warranties, conditions, limitations, and notices. Reproduction of this information with alteration is an unfair and deceptive business practice. TI is not responsible or liable for such altered documentation. Information of third parties may be subject to additional restrictions.

Resale of TI products or services with statements different from or beyond the parameters stated by TI for that product or service voids all express and any implied warranties for the associated TI product or service and is an unfair and deceptive business practice. TI is not responsible or liable for any such statements.

TI products are not authorized for use in safety-critical applications (such as life support) where a failure of the TI product would reasonably be expected to cause severe personal injury or death, unless officers of the parties have executed an agreement specifically governing such use. Buyers represent that they have all necessary expertise in the safety and regulatory ramifications of their applications, and acknowledge and agree that they are solely responsible for all legal, regulatory and safety-related requirements concerning their products and any use of TI products in such safety-critical applications, notwithstanding any applications-related information or support that may be provided by TI. Further, Buyers must fully indemnify TI and its representatives against any damages arising out of the use of TI products in such safety-critical applications.

TI products are neither designed nor intended for use in military/aerospace applications or environments unless the TI products are specifically designated by TI as military-grade or "enhanced plastic." Only products designated by TI as military-grade meet military specifications. Buyers acknowledge and agree that any such use of TI products which TI has not designated as military-grade is solely at the Buyer's risk, and that they are solely responsible for compliance with all legal and regulatory requirements in connection with such use.

TI products are neither designed nor intended for use in automotive applications or environments unless the specific TI products are designated by TI as compliant with ISO/TS 16949 requirements. Buyers acknowledge and agree that, if they use any non-designated products in automotive applications, TI will not be responsible for any failure to meet such requirements.

Following are URLs where you can obtain information on other Texas Instruments products and application solutions:

Products		**Applications**	
Amplifiers	amplifier.ti.com	Audio	www.ti.com/audio
Data Converters	dataconverter.ti.com	Automotive	www.ti.com/automotive
DSP	dsp.ti.com	Broadband	www.ti.com/broadband
Clocks and Timers	www.ti.com/clocks	Digital Control	www.ti.com/digitalcontrol
Interface	interface.ti.com	Medical	www.ti.com/medical
Logic	logic.ti.com	Military	www.ti.com/military
Power Mgmt	power.ti.com	Optical Networking	www.ti.com/opticalnetwork
Microcontrollers	microcontroller.ti.com	Security	www.ti.com/security
RFID	www.ti-rfid.com	Telephony	www.ti.com/telephony
RF/IF and ZigBee® Solutions	www.ti.com/lprf	Video & Imaging	www.ti.com/video
		Wireless	www.ti.com/wireless

Mailing Address: Texas Instruments, Post Office Box 655303, Dallas, Texas 75265
Copyright © 2008, Texas Instruments Incorporated